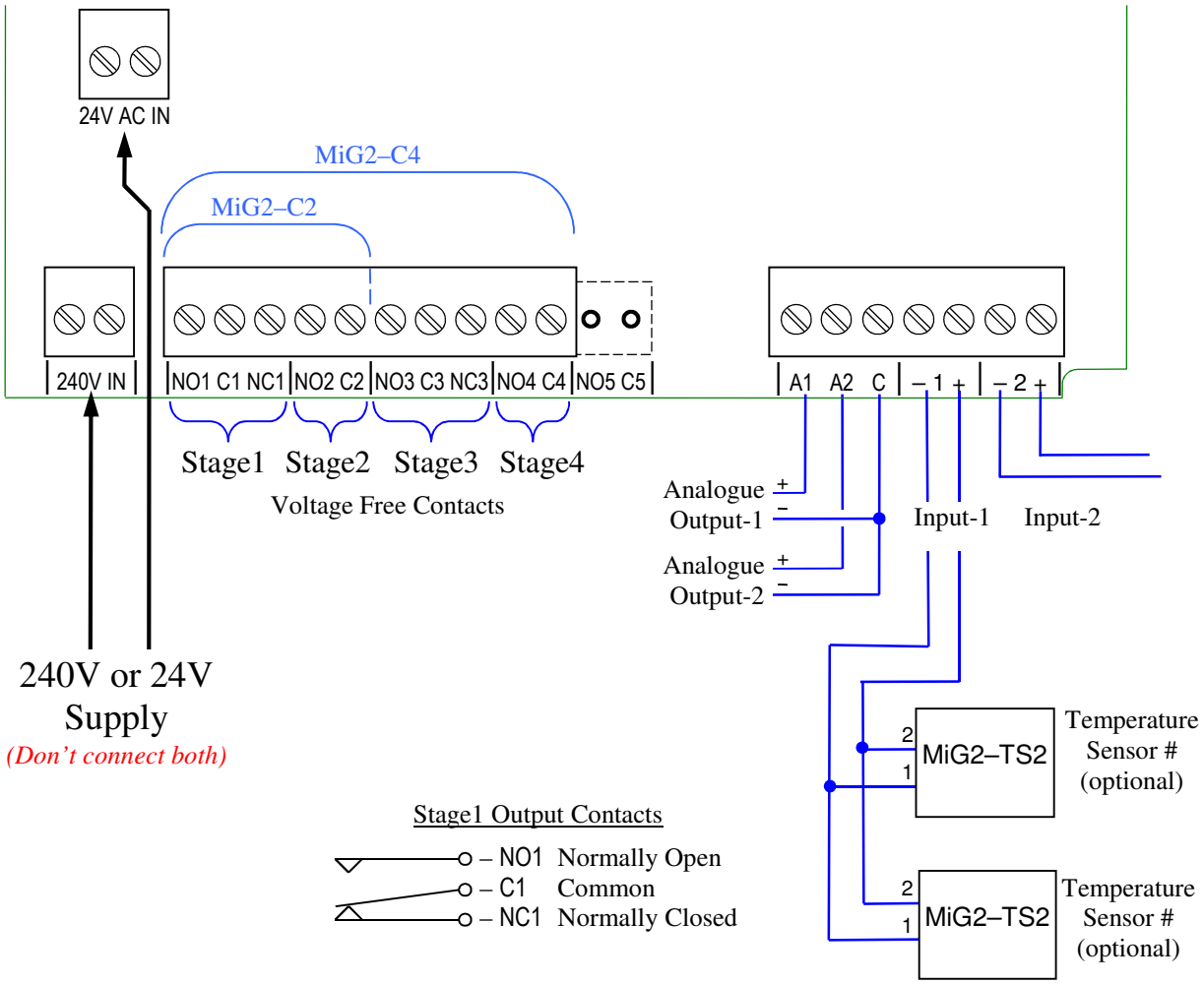MiG2–C2 Example wiring of 2 way averaging temperature sensor